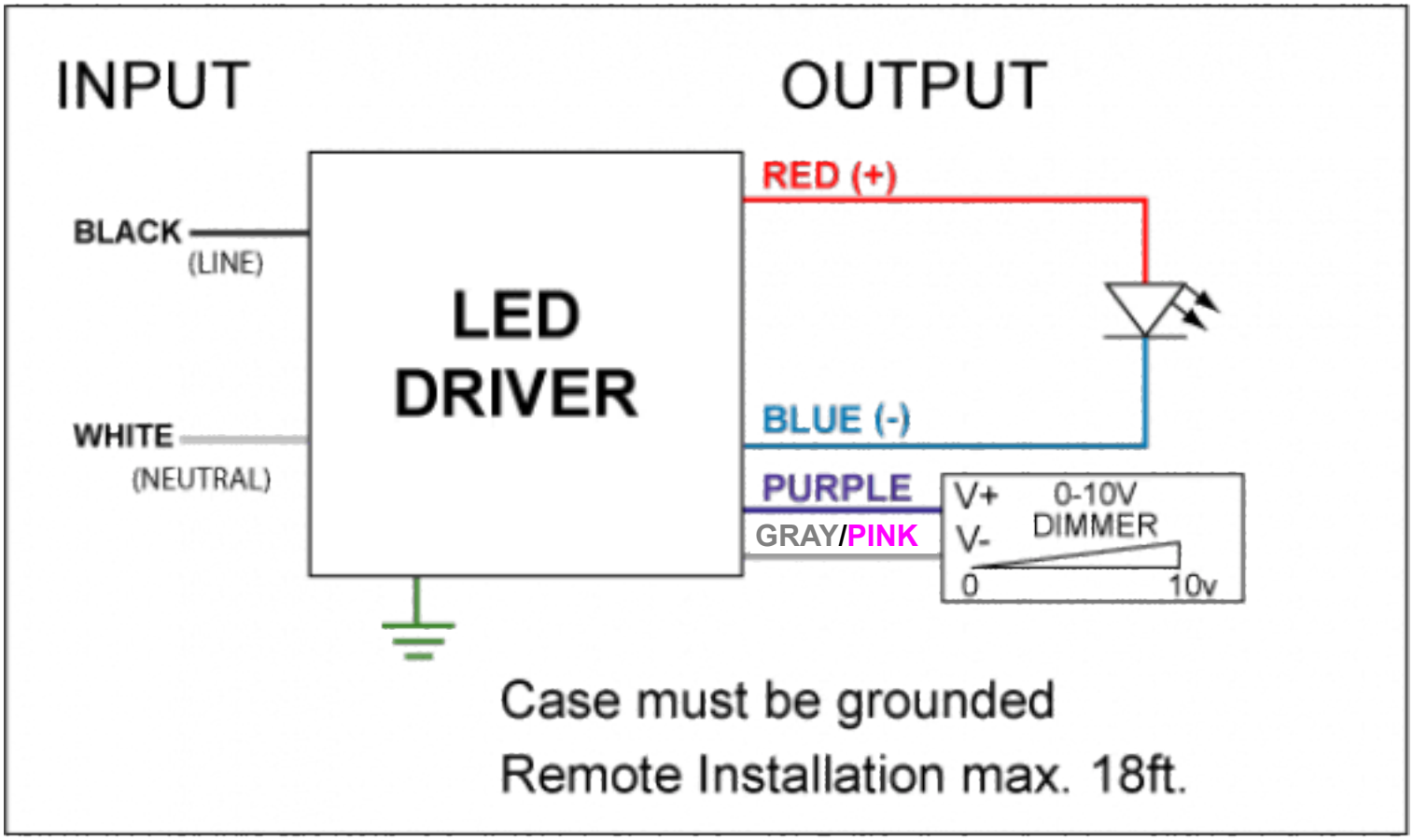
INPUT
OUTPUT
BLACK
(LINE)
WHITE
(NEUTRAL)
LED
DRIVER
RED (+)
BLUE (-)
PURPLE
GRAY/PINK
V+
V-
0-10V
DIMMER
0
10v
Case must be grounded
Remote Installation max. 18ft.