Specifications

Item -	**40259A**
Model -	**LED 18" WALL PACK 3WATT/3CCT**
Type -	**LED**
Input Voltage -	**120-277VAC 50/60Hz**
Watts -	**50/65/80**
Length -	**17.87" (454mm)**
Width -	**6.74" (171mm)**
Height -	**9.55" (243mm)**
Color Temp -	**3000K-4000K-5000K**
CRI -	**⩾80**
Lumens -	**7,500/9,750/12,000**
Lumen Efficacy -	**150lm/w**
Power Factor -	**⩾0.9**
Finish -	**Bronze**
Dimmable -	**Yes, 0-10V**
Life -	**50,000 Hours**
Ambient Operating Temp -	**-40°F to 122°F (-40°C to 50°C)**
Surge Protection -	**6KV**
Average Beam Angle -	**90°H x 70°V/90°H x 50°V Selectable**
Photocell -	**Built-in**
IP Rating -	**IP65**
Fixture Impact Rating -	**IK07**

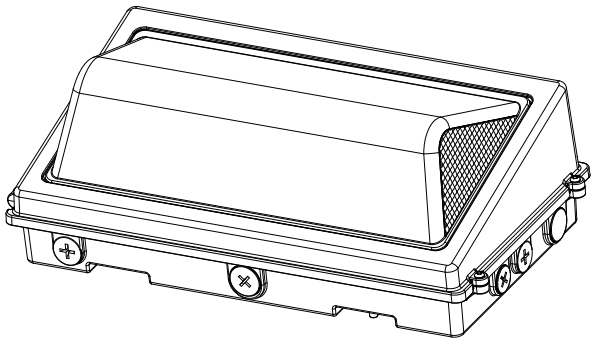

CERTIFIED

3 YEAR LIMITED WARRANTY

40259A

LED TRADITIONAL WALL PACK

DAMAR®
805 N Carnation Drive
Aurora, MO 65605

Lighting the World

Installation Instructions

Note

Any alteration or modification of this product is expressly forbidden as it may cause serious personal injury, death, property damage, and/or product malfunction.

This product is not suitable for several special environments, such as places with corrosive gas, corrosive liquids, or high pressure water vapor. Suitable for wet locations.

INSTALLATION OR ASSEMBLY INSTRUCTIONS.

Warning

PLEASE READ ALL INSTRUCTIONS BEFORE ATTEMPTING INSTALLATION

— This fixture must be wired in accordance with the national electrical code and applicable local codes and ordinances.
— To prevent personal injury or product damage only licensed electricians should install.
— To avoid electric shock or component damage disconnect power before attempting installation or servicing.
— To prevent product malfunction and/or electrical shock this product must be properly grounded.
— RISK OF PERSONAL INJURY- Fixture may become damaged and/or unstable if not installed properly.

Installation

Step 1 Select your desired CCT, wattage, and beam angle by using the three switches shown. (figure 1) This must be done while the fixture is powered off.

At the same mounting height, the 70° angle provides a longer projection distance than the 50° angle.

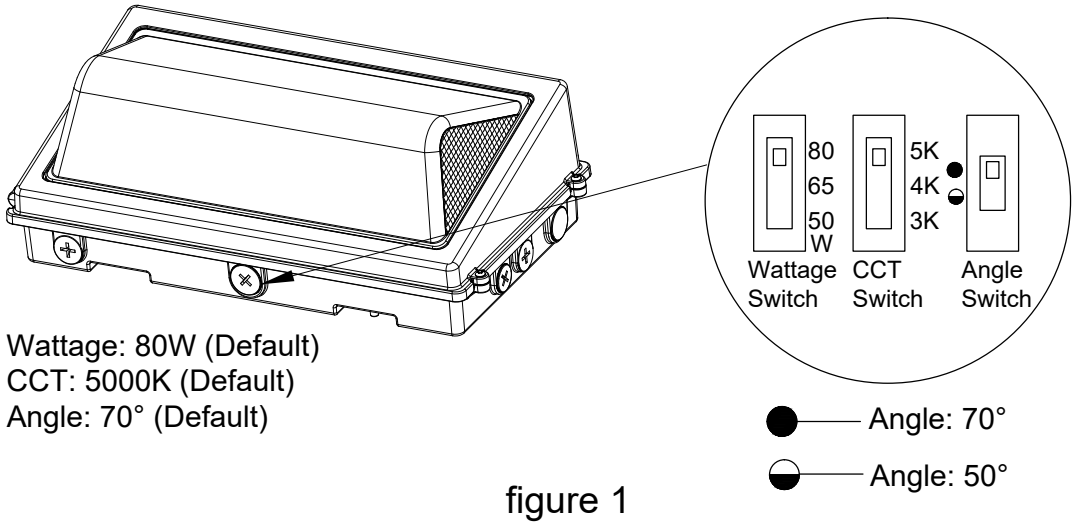

Wattage: 80W (Default)
CCT: 5000K (Default)
Angle: 70° (Default)

figure 1

DAMAR®
805 N Carnation Drive
Aurora, MO 65605

Lighting the World

Installation Instructions

Step 2 Open the cover by unscrewing the screws that are located on the side of the wall pack**.** (figure 2)
Step 3 Attach the rear housing to the wall. (figure 3) Observe the built-in bubble level and adjust the fixture until the bubble is centered, indicating that the fixture is level.

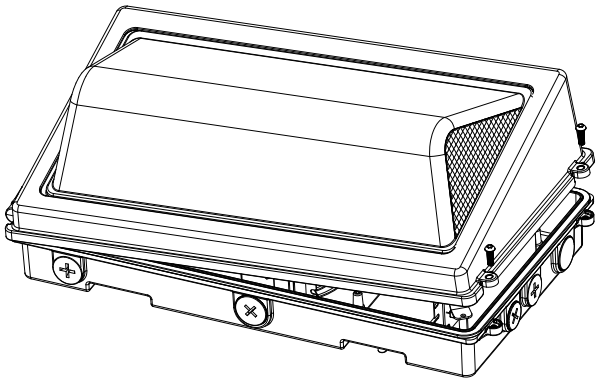

figure 2

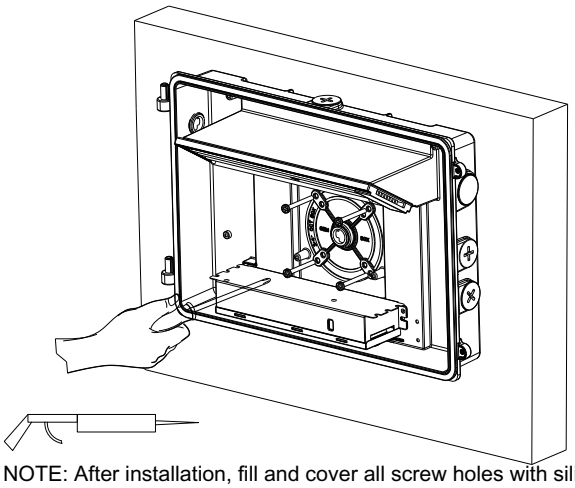

NOTE: After installation, fill and cover all screw holes with silicone sealant for waterproofing against leakage.

figure 3

Method 1 Remove the pre-cast locators at the back of the rear housing and attach the fixture with 4 screws (provided) to the standard junction box on the wall. (figure 3)

Method 2 Drill holes at the required four mounting points, (figure 3.1) mount the fixture by securing mounting screws (provided) through the drilled holes, and seal the screw heads with appropriate waterproofing material. (figure 3.2)

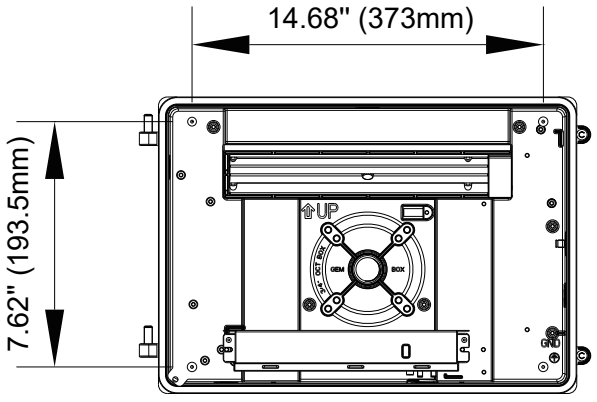

figure 3.1

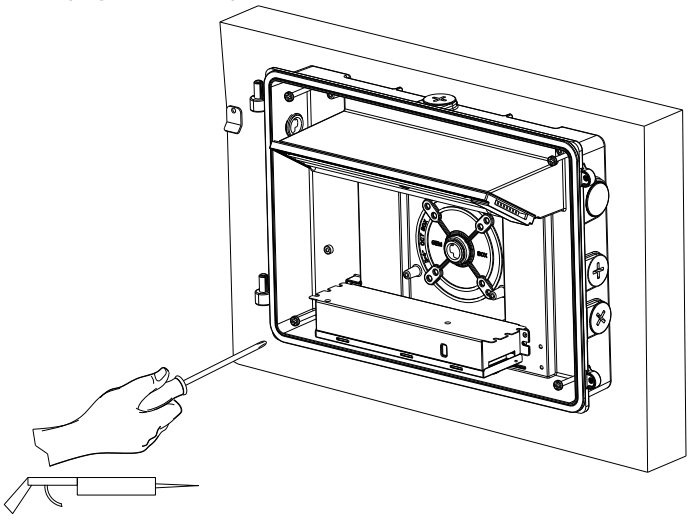

NOTE: After installation, fill and cover all screw holes with silicone sealant for waterproofing against leakage.

figure 3.2

DAMAR® Lighting the World
805 N Carnation Drive
Aurora, MO 65605

Installation Instructions

Step 4 Photocell Enable/Disable. This fixture is equipped with a dusk-to-dawn photocell inside the right cover. Adjust the switch to enable (ON) or disable (OFF) the photocell function. The fixture comes pre-set with the photocell enabled. (figure 4)
Step 5 Close the diffuser door and lock it with the 2 diffuser door screws. Make sure all wiring access holes are sealed properly for waterproofing purposes. (figure 5)
Step 6 Turn on the electricity to verify your successful installation.

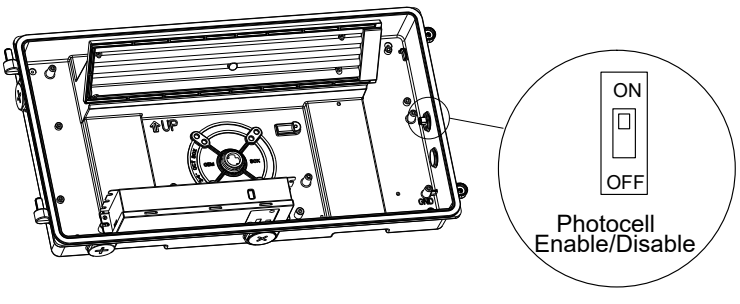

figure 4

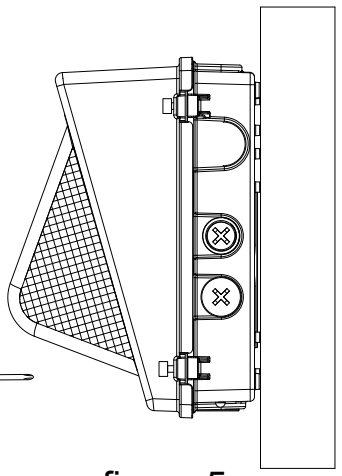

figure 5

Wiring Diagram

General Wiring Diagram

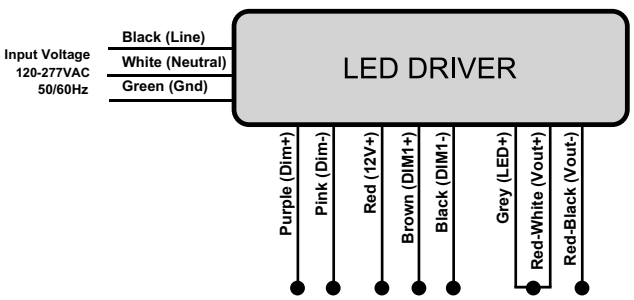

1. Purple (DIM+), Pink (DIM-): Dimming wires to 0-10V IEC compliant control.
2. Red (12V+), Brown (DIM1+), Black (DIM1-): For sensor.
3. Grey (LED+), Red-White (Vout+), Red-Black (Vout-): Reserved wires.

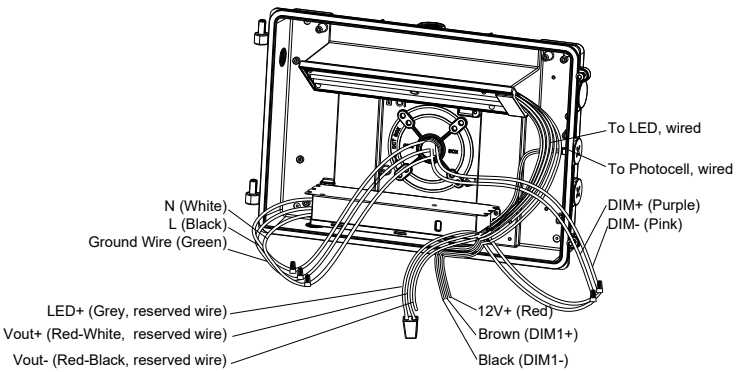

DAMAR® Lighting the World
805 N Carnation Drive
Aurora, MO 65605