WIRING DIAGRAM

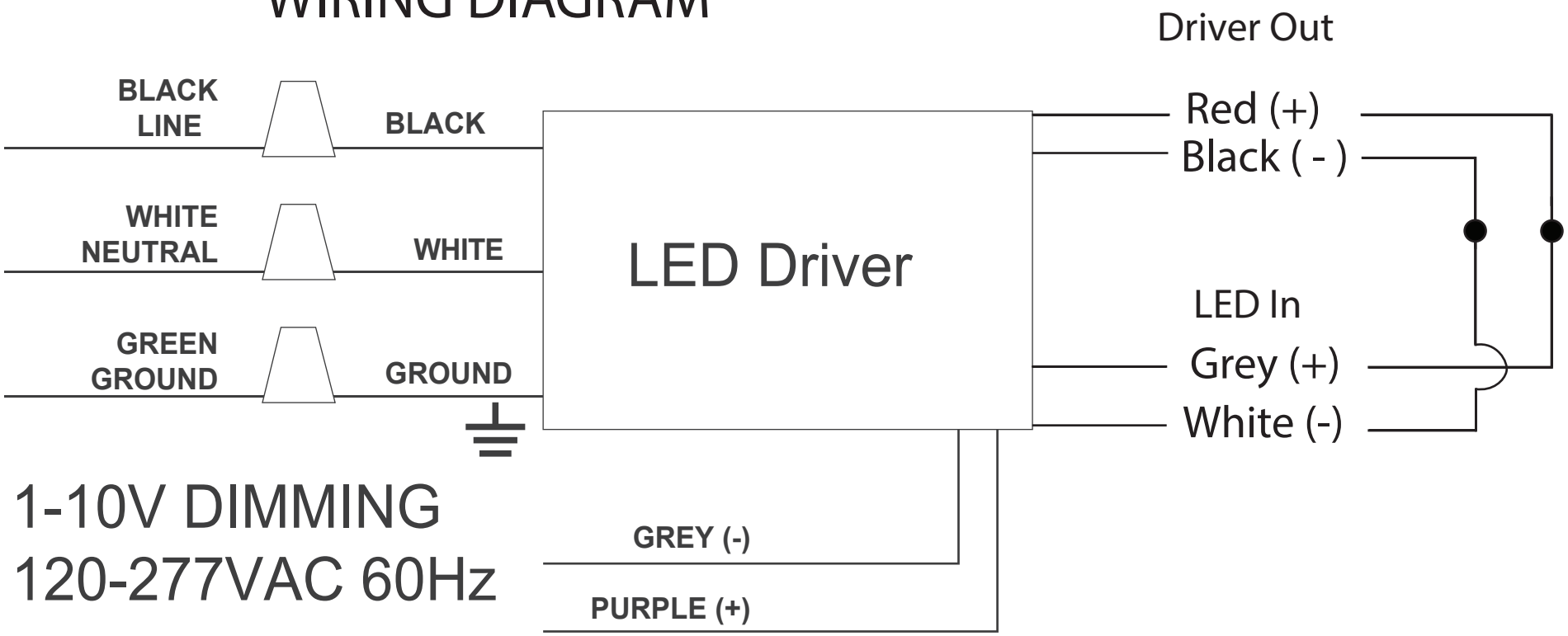

1-10V DIMMING
120-277VAC 60Hz